PRODUCT SPECIFICATIONS

OCEAN MASTER MEGA MAX CLASSIC

LIFT SYSTEM: EASYDRIVE CRANK



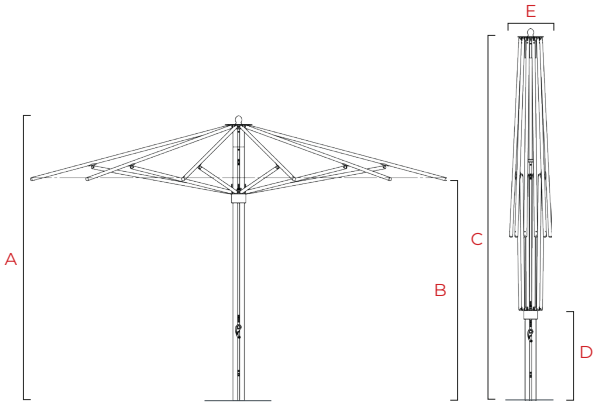

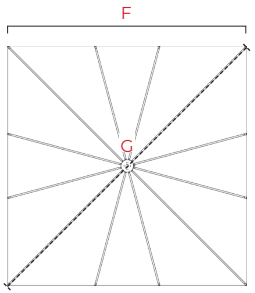

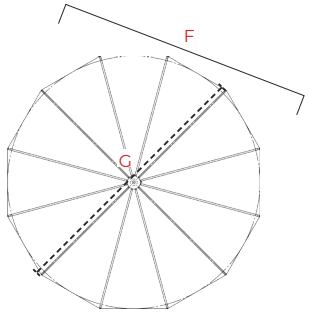

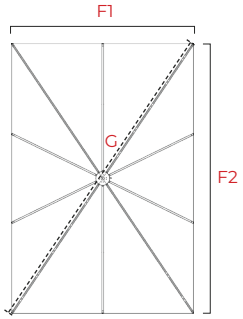

SHAPES		SQUARE			ROUND			RECTANGLE		
SIZES (ft/cm)		16.0 / 490	20.0 / 600	24.0 / 740	16.0 / 490	20.0 / 600	24.0 / 740	14.0 x 20.0 / 425 x 600	16.0 x 24.0 / 490 x 740	18.0 x 24.0 / 550 x 740
A (in/cm)	MAST HEIGHT (open position)	131 / 333	137 / 348	144 / 366	131 / 333	137 / 348	144 / 366	137 / 348	144 / 366	146 / 371
B (in/cm)	CANOPY CLEARANCE	103 / 261	103 / 261	103 / 261	103 / 261	103 / 261	103 / 261	103 / 261	102 / 259	105 / 267
C (in/cm)	MAST HEIGHT (closed position)	183 / 464	186 / 472	207 / 526	182 / 463	186 / 472	208 / 528	186 / 472	207 / 526	209 / 531
D (in/cm)	TABLE CLEARANCE	45 / 114	14 / 35	7⁄16 / 1	80 / 203	58 / 147	54 / 137	36 / 89	30 / 76	24 / 61
E (in/cm)	PARASOL WIDTH (closed)	18 / 46	18 / 46	18 / 46	18 / 46	18 / 46	18 / 46	18 / 46	18 / 46	18 / 46
F (in/cm)	FLAT TO FLAT	192 / 487	240 / 609	287 / 729	192 / 487	240 / 609	288 / 731	F1 x F2: 165 x 244 / 418 x 620	F1 x F2: 193 x 286 / 490 x 726	F1 x F2: 217 x 289 551 x 734
G (in/cm)	POINT TO POINT	271 / 689	339 / 861	406 / 1031	192 / 487	240 / 609	288 / 731	295 / 748	345 / 876	361 / 917
(ft²/m²)	CANOPY AREA COVERAGE	255.1 / 23.7	399 / 37.1	571.6 / 53.1	200.2 / 18.6	313.2 / 29.1	452.1 / 42	278.8 / 25.9	383.2 / 35.6	434.9 / 40.4

Dimension Tolerances ± 2" / 5cm. Dimensions shown are rounded to the nearest inch and correspond to indicated lift system. Options are subject to change without notice.